# “Effect of Grain Size on the Mechanical Properties of Multiphase Alloys”

## NSF grant: DMR-0201474

Carl Koch, Ron Scattergood and K.L. Murty

North Carolina State University

To study the mechanical behavior of nanostructued Al with Pb and W nanoscale dispersoids, nanoscale powders of the alloys were processed by mechanical attrition using SPEX-8000 Shaker mill at room temperature with surfactant. Milling times were adjusted to yield the grain size in the range from 28-34 nm as revealed by x-ray diffraction. The high purity powders were compacted using 6.35 mm dia W die at 300 C to 1.8 GPa pressure to achieve 99% density.

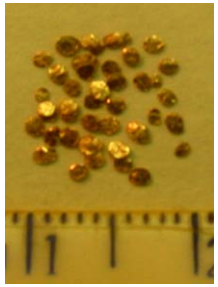

Hardness measurements indicated extensive softening due to minute (<1 at %) additions of Pb while W made Al stronger.
Other mechanical property tests such as MDBT, SPT, ABI and mini-tensile are planned along with TEM studies.

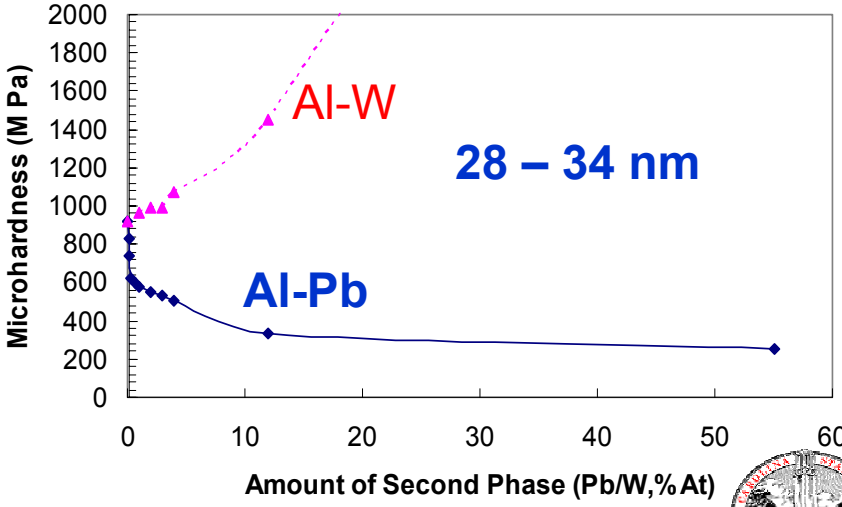

# "Effect of Grain Size on the Mechanical Properties of Multiphase Alloys"

NSF grant: DMR-0201474

Carl Koch, Ron Scattergood and K.L. Murty

North Carolina State University

**Mechanical test techniques for testing miniature specimens developed and checked using conventional materials include: MDBT, SPT and BI**
**A mini-tensile machine is fabricated and is now ready for check up and verification.**

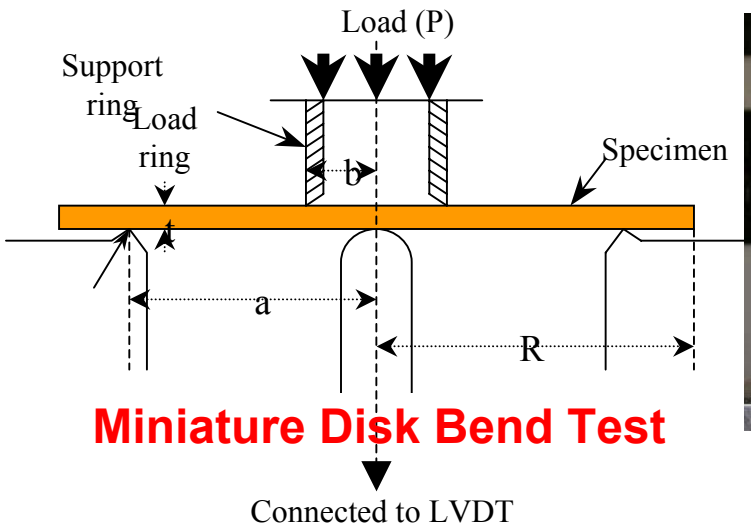


**Miniature Disk Bend Test**

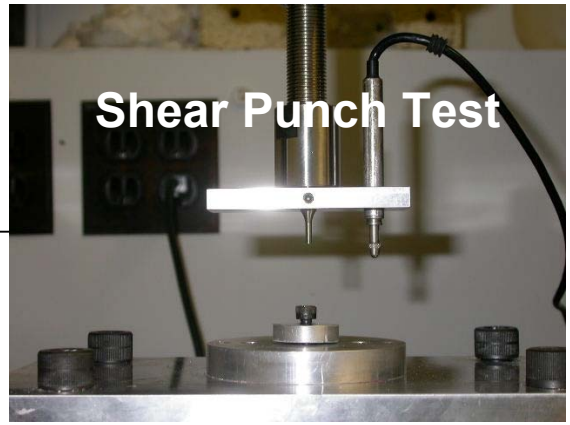

**Mini Tensile Tester**

The grant supported 3 graduate students:
Mr. K. Rajulapati, doctoral student
Mr. R. Guduru, doctoral student
Mr. G. Trichy, masters student

REUs: Mr. K. Darling & Ms. A. Griffith

C. Koch et al, "Testing Techniques for Mechanical Characterization of Nanostructured Materials," Proceedings of MRS Symp. Proc. Vol. 791 (2004), pp. Q3.1.1-Q3.1.12.